PRODUCT SHEET

Description:
Bar To Glass Bracket, F/ø19mm Tube, Brushed Brass, 8-10mm.

Item number:
15.26.102-5

Units	Box	Carton	HS Code	Barcode
Pcs.	1	50	8302419000	5704866512244

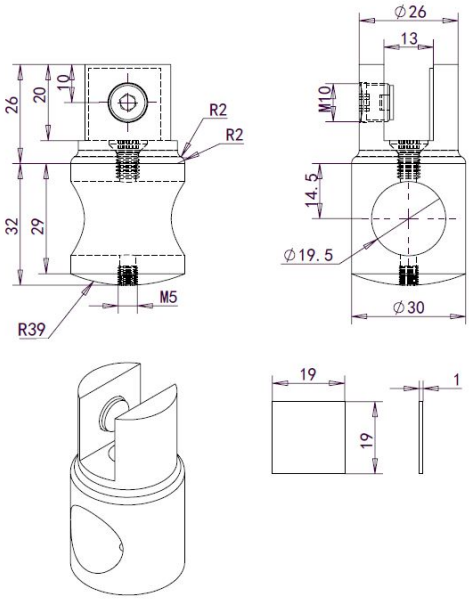

SISO A/S
Mileparken 11
DK-2740 Skovlunde
Denmark
VAT: DK 24786013

Phone +45 45 830 900

www.siso.dk
siso@siso.dk

Danske Bank
Nytorv Branch
Copenhagen
SWIFT: DABADKKK

Account no.
4180 3112 112936
IBAN Account
DK7230003112112936